Mini Lens Holders
V-Groove Lens Holders

TLH
LHA

Application Systems
Optics & Optical Coatings
Opto-Mechanics
Bases
Manual Stages
Actuators & Adjusters
Motoeized Stages
Light Sources & Laser Safety
Index
Guide
Mirrors
Lenses
Prisms
Polarizers
Lasers
Beam Shaping Diffusers
Filters
Shutter
Others
Fiber

TLH

RoHS Catalog Code W4101

These fixed lens holders are designed to be narrower than the diameter of lenses they hold.

- Intended for compact optical layouts where the lenses need to be placed close to each other in parallel.
- Place the plano side of a lens against the holder.
- The simple setscrew mounting method makes replacement of lenses easy.
- Can secure plano concave lenses with edge thickness of 1mm.

2D CAD 3D CAD

Outline Drawing

TLH-5-DRi
TLH-10-DRi
TLH-12.7-DRi

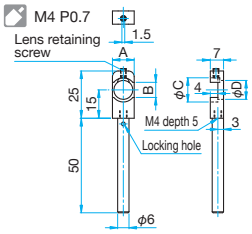

TLH-25.4-DRi
TLH-30-DRi

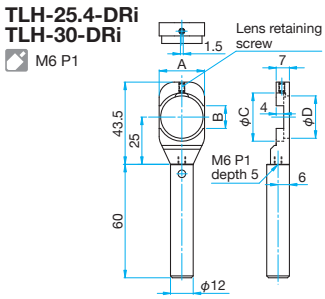

Guide

▶Post length can be changed by specifying the post length when you place an order. We may charge the difference in price depending on the length. Contact our Sales Division for more information.

Attention

▶Over tightening the lens retaining screws can bend these holders.
Tighten screw lightly only until the lens does not move.
▶Lenses may come loose when these holders are used in environments subject to vibration or transported while lenses are mounted.
▶Cannot hold biconvex lenses which have short focal length.

Specifications

Primary material: Aluminum
Finish: Black Anodized

Part Number	Options specified*	Compatible Optics Diameter φC [mm]	Clear Aperture φD [mm]	Height optical axis [mm]	Compatible Optics Thickness [mm]	A [mm]	B [mm]	Weight [kg]
TLH-5-DRi	N	φ5	φ3	15	1 – 3	4.5	4	0.013
TLH-10-DRi	N	φ10	φ7	15	1 – 4	8.5	7	0.013
TLH-12.7-DRi	N	φ12.7	φ10	15	1 – 4	11.5	8	0.014
TLH-25.4-DRi	N	φ25.4	φ22.4	25	1 – 4	24	12	0.065
TLH-30-DRi	N	φ30	φ27	25	1 – 4	28.5	15	0.065

* For specifying options, please refer to "Conversion of Posts, Post Holders and Pedestal Bases of Holders". Reference C007

LHA

RoHS Catalog Code W4020

Designed to hold lenses of various sizes.
Appropriate When non standard diameter lenses are used.

- The v-groove can hold other cylindrical components like light sources.
- The clamp and v-groove secure the lenses.

2D CAD 3D CAD

Specifications

LHA M6 P1

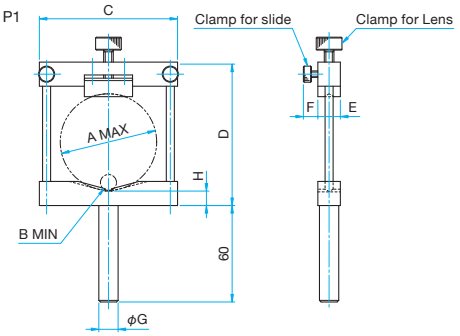

Part Number	φA (mm)	φB (mm)	C (mm)	D (mm)	E (mm)	F (mm)	φG (mm)	H (mm)
LHA-25	φ25.4	φ5	40	45	12	(8)	φ12	7.5
LHA-60	φ60	φ10	86	88	14	(9)	φ12	9
LHA-100	φ101.6	φ20	134	135	19	(13)	φ20	8

Guide

▶Post length can be changed by specifying the post length when you place an order. We may charge the difference in price depending on the length. Contact our Sales Division for more information.

Attention

▶Make sure to tighten the slide clamps along the two poles before tightening the lens clamp.

Specifications

Primary material: Aluminum
Finish: Black Anodized

Part Number	Options specified*	Compatible Optics Diameter [mm]	Compatible Optics Thickness [mm]	Weight [kg]
LHA-25	N/EE/UU	φ5 – φ25.4	1 – 2.5	0.1
LHA-60	N/EE/UU	φ10 – φ60	1 – 4.7	0.2
LHA-100	N/EE/UU	φ20 – φ101.6	1 – 7	0.5
LHA-150	N	φ30 – φ150	1 – 7	0.8

* For specifying options, please refer to "Conversion of Posts,

INTERLAB®
INTERLAB Sp. z o.o. | Instrumenty badawcze i pomiarowe
Kosiarzy 37 paw. 20, 02-953 Warszawa | +48 22 840 81 80 | interlab@interlab.pl | interlab.pl